Shape Representation and Retrieval Using Radial Basis Probabilistic Neural Networks

Zyad Shaaban and Thawar Arif

Faculty of Information Technology, Applied Science University, Amman 11931, Jordan

Summary
This paper presents a 2D shape retrieval system using moment invariants based on a representation of image boundary of the shape objects. The original binary image is transformed into a matrix which consists of numbers that represents the distance to the shape contour. Chessboard distance transform is used for the representation of the shape contour. Moment invariants are computed for the original binary image and the proposed transformed contour image. In this paper, we use radial basis probabilistic neural networks to recognize the object shapes based on moment invariants features extracted from the shape contour. The effectiveness of the proposed shape retrieval system using moment invariants based on image contour is reported.
Key words:
Shape retrieval, distance transformation, neural networks, image contour, moment invariants

1. Introduction

In various computer vision applications widely used is the process of retrieving desired images from a large collection on the basis of features that can be automatically extracted from the images themselves. These systems called Content-Based Image Retrieval (CBIR) have received intensive attention in the literature of image information retrieval since this area was started years ago, and consequently a broad range of techniques has been proposed [1].
The algorithms used in these systems are commonly divided into three tasks [1]:
- extraction,
- selection, and
- classification.
The extraction task transforms rich content of images into various content features. Feature extraction is the process of generating features to be used in the selection and classification tasks. Feature selection reduces the number of features provided to the classification task. Those features which are likely to assist in discrimination are selected and used in the classification task. Features which are not selected are discarded [2].
Of these three activities, feature extraction is most critical because the particular features made available for discrimination directly influence the efficacy of the classification task.
The end result of the extraction task is a set of features, commonly called a feature vector, which constitutes a representation of the image.
In the last few years, a number of above mentioned systems using image content feature extraction technologies proved reliable enough for professional applications in industrial automation [3], biomedicine [4], social security [5], biometric authentication [6] and crime prevention [7].
CBIR combines high-tech elements such as [1]:
- multimedia, signal and image processing,
- pattern recognition,
- human-computer interaction,
- human perception information sciences.
The feature is defined as a function of one or more measurements, each of which specifies some quantifiable property of an object, and is computed such that it quantifies some significant characteristics of the object.
We classify the various features currently employed as follows [1]:
• General features: Application independent features such as color, texture, and shape. According to the abstraction level, they can be further divided into:
- Pixel-level features: Features calculated at each pixel, e.g. color, location.
- Local features: Features calculated over the results of subdivision of the image band on image segmentation or edge detection.
- Global features: Features calculated over the entire image or just regular sub-area of an image.
• Domain-specific features: Application dependent features such as human faces, fingerprints, and conceptual features. These features are often a synthesis of low-level features for a specific domain.
Contour-based features of object shapes have been widely used to achieve this ability. The main advantages of using contour-based features for pattern recognition are: (1) It is extremely efficient to use contours for coding; (2) It is

Manuscript received December 5, 2008
Manuscript revised December 20, 2008

easy to obtain object contours from files in MPEG-7 which is a standard format for meta-data. The contours of 2D shapes can be represented by sequential feature vectors, which are regarded as the equivalence of time-varying signals. In a short segment, the signal can be considered as a stationary process with minor fluctuations [8].

In this paper, we present a new shape retrieval system based on extracting Hu Moment Invariants (HMI) features from the contour image which is obtained using chessboard distance transform.

The outline of this paper is organized as follows: The next section presents the shape representation. Section 3 describes the moment invariants. In section 4, we introduce briefly the radial basis neural networks. Section 5 introduces the proposed retrieval system. In section 6 we report the experimental results while section 7 gives the conclusion.

2. Shape Representation

Shape representation is a crucial step in shape analysis and matching systems. The complexity and the performance of the subsequent steps in shape analysis systems are largely dependent on the invariance, robustness, stability, and uniqueness of the applied shape representation method.

The multi-scale approach for shape representation and matching is considered the most promising. It can be argued that human perception of shapes is a multi-scale by nature. In addition, many interesting shape properties are revealed at different scale levels. Another advantage includes its invariance to moderate amounts of deformations and noise [9].

The representation of shapes requires a number of criteria to be satisfied for reliable shape matching and retrieval. It should be invariant to geometrical transformations, such as rotation, scale, translation, and skew. This requirement arises from the problem of projecting the 3D real world objects into 2D images. In addition, a shape representation should satisfy the following criteria: high discrimination capability, computational efficiency, robustness to distortion and noise, compactness, generality of the application, and handling large image databases without heavy degradation in the performance [10]. The following subsection presents the distance transform and the proposed chessboard distance transform procedure that will be used in our proposed retrieval system.

2.1 Distance Transform

Distance transformation (DT) is to convert a digital binary image that consists of object (foreground) and non-object (background) pixels into another image in which each object pixel has a value corresponding to the minimum distance from the background by a distance function.

Let S be a set of pairs of integers. The function d mapping from S x S to non-negative integers is called a distance function, if it is [11]:

(a) Positive definite: That is $d(p, q) \geq 0$, and $= 0$, if and only if $p = q$, for all $p, q \in S$.

(b) Symmetric: That is $d(p, q) = d(q, p)$, for all $p, q \in S$.

(c) Triangular: That is $d(p, r) \leq d(p, q) + d(q, r)$, for all $p, q, r \in S$.

Among different kinds of distance transformation, the Euclidean distance transform (EDT) is often-used because of its rotation invariance property, but it involves the time-consuming calculations such as square, square-root and the minimum over a set of floating-point numbers.

In general, the algorithms of DT can be categorized into two classes: one is the iterative method which is efficient in a cellular array computer since all the pixels at each iteration can be processed in parallel, and the other is sequential (or recursive) method which is suited for a conventional computer by avoiding iterations with the efficiency to be independent of object size. Using the general machines that most people working in digital image processing have access to, sequential algorithms are often much more efficient than iterative ones [11].

Three distance functions are often used in digital image processing. If there exist two points p= (x, y) and q = (u, v) in a digital image, the distance function is defined as follows [12]:

(a) City-block distance: $d_4(p, q) = |x - u| + |y - v|$.

(b) Chessboard distance: $d_8(p, q) = \max(|x - u|, |y - v|)$.

(c) Euclidean distance: $d_e(p, q) = \sqrt{(x-u)^2 + (y-v)^2}$.

(d) Squared Euclidean distance: $d_s(p,q) = (x-u)^2 + (y-v)^2$.

Note that the pixels with city-block distance 1 counting from p correspond to 4-neighbors of p, and with chessboard distance 1 correspond to 8-neighbors of p. These d_4 and d_8 are integer-valued; however, d_e is not.

City-block and chessboard distances are very easy to compute since they can be recursively accumulated by considering only 4- or 8-neighbors, respectively, at one time. A disadvantage of city-block and chessboard distances is that both distance measures are very sensitive to the orientation of an object. The Euclidean distance by definition is rotation-invariant. However, its square-root calculation is costly and its global computation of distance computation is very difficult to decompose into small neighborhood operations due to its non-linearity of Euclidean distance variations [11]. In this paper, we will use chessboard distance transform in our proposed representation method for determining the boundary levels of the object pixels.

The proposed Chessboard distance transform algorithm:

Step1*:* Apply CHDT on foreground pixels.
Step2*:* Apply CHDT on background pixels.
Step3*:* Find the difference between CHDT on background and foreground to get a matrix that consists of numbers that represents the distance to the shape contour.
Step4*:* Convert the negative values into positive values by subtracting all values of the matrix obtained by step3 from the minimum value.

The results of the proposed algorithm are shown in figure 1. We can see from the outputs of the algorithm that the new description using Chessboard distance transformation represents the shape image in spite of variations in the shape as shown in figure 1.

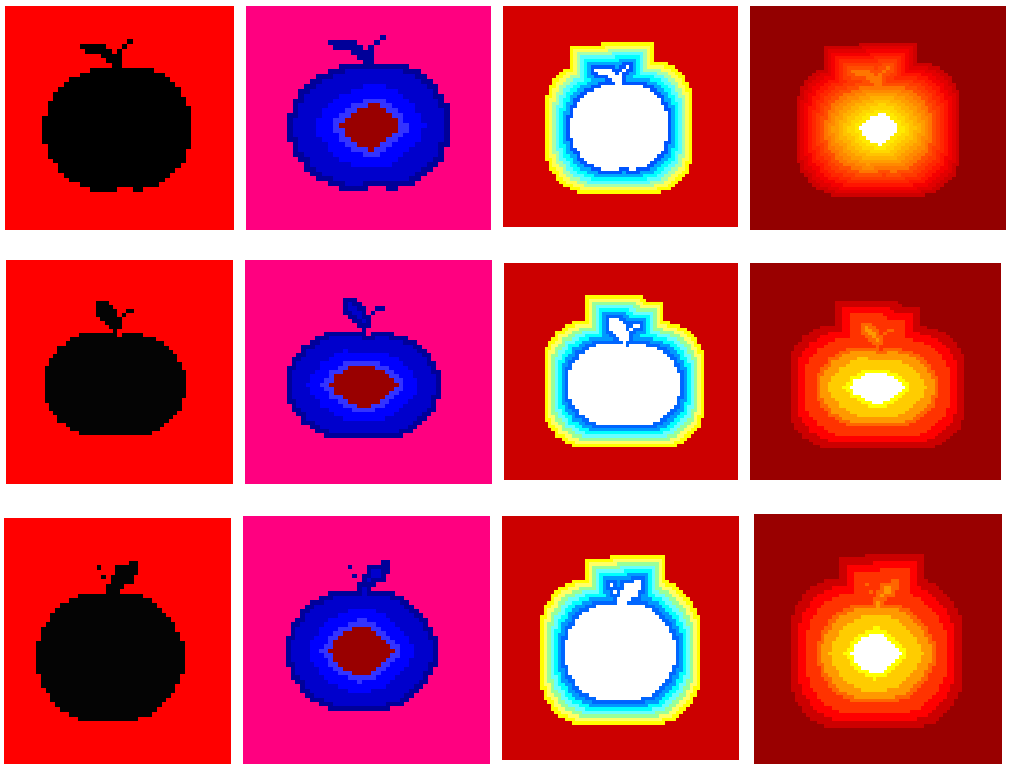

a b c d

Fig. 1 a) Binary image b) CHDT on foreground pixles c) CHDT on background pixles d) The new representation image of CHDT

3. Moment Invariants

Shape based image retrieval is the measuring of similarity between shapes represented by their features. Shape is an important visual feature and it is one of the primitive features for image content description. Shape content description is difficult to define because measuring the similarity between shapes is difficult. Therefore, two steps are essential in shape based image retrieval, they are: feature extraction and similarity measurement between the extracted features. Shape descriptors can be divided into two main categories: region based and contour-based methods. Region-based methods use the whole area of an object for shape description, while contour-based methods use only the information present in the contour of an object [1].

In retrieval applications, a small set of lower order moments is used to discriminate among different images. The most common moments are [13]:

- the geometrical moments,
- the central moments and the normalized central moments,
- the moment invariants,

- the Zernike moments and the Legendre moments (which are based on the theory of orthogonal polynomials),
- the complex moments.

The area of pictorial databases has recently become a subject of extensive research. Large databases of images are used in different applications including multimedia systems, medical imaging systems, and documents systems. The most common form of retrieval is based on image content. For most of the applications, content is defined in terms of three basic components: color, shape, and texture. This paper concentrates on shape based retrieval [14].

Traditional approaches to shape retrieval, while providing good accuracy and efficiency, still suffer from instability as a result of viewpoint transformations. This follows from the fact that the invariance of the exploited features is limited [14].

There are two main types of invariants: algebraic invariants and differential invariants. Algebraic invariants are based on a global description of the shapes by algebraic entities such as lines, conics, and polynomials. Differential invariants are based on describing the shape by arbitrary differentiable functions. These methods have been applied to various vision problems. The algebraic approach was used for example by [15] and [16], while the use of differential invariants can be found in [17] and [18]. Both methods proved to have advantages and disadvantages. The algebraic method, while simple and easy to implement, is quite limited in the kinds of shapes that it can handle because most shapes are not representable by simple low-order polynomials. The differential method is more general because it can handle arbitrary curves, but it relies on the use of local information such as derivatives (of quite high orders) [14].

Moments invariants are widely used in image processing, pattern recognition and computer vision. Several methods and algorithms have been proposed for fast and efficient calculation of moment's invariants where numerical approximation errors are involved in most of these methods [19].

Moments invariants were introduced in the pioneer work of Hu [20], who employed the results of the theory of algebraic invariants and derived his seven invariants to rotation of 2D objects. Hu's invariants have been utilized as pattern recognition features in a number of applications such as aircraft identification [21], data matching [22], character recognition [23], image normalization [24] and texture classification [25].

Computation of moment invariants is completely dependent on the algebraic relation with geometric or complex moments. Therefore, accurate computation of geometric and complex moments consequently led to accurate moment invariants [19].

Image or shape feature invariants remain unchanged if that image or shape undergoes any combination of the geometric changes: change of position- Translation, change of size- Scaling and change of orientation – Rotation and finally reflection. The moment invariants can be subdivided into skew and true moment invariants where the skew moment invariants are invariant under change of position, size and rotation (Rotation – scaling- scaling – translation) only. True moment invariants are invariant under all of the previous changes including reflection [19]. In the following subsection, we describe the seven Hu moments which are used in our proposed retrieval system.

3.1 Regular Moment Invariants

Two-dimensional moments of order $(p+q)$ of a digitally image of size N by M that has gray function $f(x,y)$ are given as:

$$m_{pq} = \sum_x \sum_y x^p y^p f(x,y) \quad \text{for } p,q = 0,1,2,3,....$$

The central moments that have the property of translation invariance are defined as

$$\mu_{pq} = \sum_x \sum_y \left(x-\bar{x}\right)^p \left(y-\bar{y}\right)^q f(x,y) \quad \text{where}$$

$$\bar{x} = m_{10} / m_{00} \quad \text{and} \quad \bar{y} = m_{01} / m_{00}$$

For a black and white image, the above equation becomes

$$\mu_{pq} = \sum_x \sum_y \left(x-\bar{x}\right)^p \left(y-\bar{y}\right)^q \quad \text{where } f(x,y) = 1.$$

The normalized central moments that have the property of image scaling, denoted by η_{pq} are defined as

$$\eta_{pq} = \mu_{pq} / \mu_{00}^{\lambda} \;, \lambda = [(p+q)/2]+1, \quad \text{for } p + q = 2,3,...$$

The following set of moments introduced by Hu, is invariant to object translation, scaling and rotation. In terms of the normalized central moments, the seven Hu moment invariants are given as [20]:

$$I_1 = \eta_{20} + \eta_{02}$$
$$I_2 = (\eta_{20} - \eta_{02})^2 + 4\eta_{11}^2$$
$$I_3 = (\eta_{30} - 3\eta_{12})^2 + (3\eta_{21} - \eta_{03})^2$$
$$I_4 = (\eta_{30} + \eta_{12})^2 + (\eta_{21} + \eta_{03})^2$$
$$I_5 = (\eta_{30} - 3\eta_{12})(\eta_{30} + \eta_{12})[(\eta_{30} + \eta_{12})^2 - 3(\eta_{21} + \eta_{03})^2] + (3\eta_{21} - \eta_{03})(\eta_{21} + \eta_{03})[3(\eta_{30} + \eta_{12})^2 - (\eta_{21} + \eta_{03})^2]$$
$$I_6 = (\eta_{20} - \eta_{02})[3(\eta_{30} + \eta_{12})^2 - (\eta_{21} + \eta_{03})^2] + 4\eta_{11}(\eta_{30} + \eta_{12})(\eta_{21} + \eta_{03})$$
$$I_7 = (3\eta_{21} - \eta_{30})(\eta_{30} + \eta_{12})[(\eta_{30} + \eta_{12})^2 - 3(\eta_{21} + \eta_{03})^2] + (3\eta_{12} - \eta_{30})(\eta_{21} + \eta_{03})[3(\eta_{30} + \eta_{12})^2 - (\eta_{21} + \eta_{03})^2]$$

4. Radial Basis Neural Networks

Artificial neural network methods offer a variety of desirable properties, such as tolerance to noisy or incomplete input, generalization from training data, and the ability to model almost any finite-dimensional vector function on a computer set, given a sufficient number of adaptable parameters (connection weights) [26].

In some existing neural nets based CBIR systems, the weights of neural nets are obtained through two phases: off-line training followed by on-line updating. These two steps correspond to the processes of pattern memory and neural similarity metric adaptation [27].

Neural nets, as a powerful modeling tool, have demonstrated its good potential for image retrieval tasks. It has been successfully applied in intelligent image retrieval systems, especially for semantics recognition and learning similarity measure [27].

Radial Basis Functions are powerful techniques for interpolation in multidimensional space. A RBF is a function which has built into a distance criterion with respect to a centre. Radial basis functions have been applied in the area of neural networks where they may be used as a replacement for the sigmoidal hidden layer transfer function in multilayer perceptrons. RBF networks have 2 layers of processing: In the first, input is mapped onto each RBF in the 'hidden' layer. The RBF chosen is usually a Gaussian. In regression problems the output layer is then a linear combination of hidden layer values representing mean predicted output. The interpretation of this output layer value is the same as a regression model in statistics. In classification problems the output layer is typically a sigmoid function of a linear combination of hidden layer values, representing a posterior probability. Performance in both cases is often improved by shrinkage techniques, known as ridge regression in classical statistics and known to correspond to a prior belief in small parameter values (and therefore smooth output functions) in a Bayesian framework [29].

RBF networks have the advantage of not suffering from local minima in the same way as multilayer perceptrons. This is because the only parameters that are adjusted in the learning process are the linear mapping from hidden layer to output layer. Linearity ensures that the error surface is quadratic and therefore has a single easily found minimum. In regression problems this can be found in one matrix operation. In classification problems the fixed non-linearity introduced by the sigmoid output function is most efficiently dealt with using iterated reweighted least squares [29].

RBF networks have the disadvantage of requiring good coverage of the input space by radial basis functions. RBF centres are determined with reference to the distribution of the input data, but without reference to the prediction task. As a result, representational resources may be wasted on areas of the input space that are irrelevant to the learning task. A common solution is to associate each data point with its own centre, although this can make the linear system to be solved in the final layer rather large, and requires shrinkage techniques to avoid overfitting [29].

4.1 Probabilistic Neural Network

Probabilistic neural networks can be used for classification problems. When an input is presented, the first layer computes distances from the input vector to the training input vectors, and produces a vector whose elements indicate how close the input is to a training input. The second layer sums these contributions for each class of inputs to produce as its net output a vector of probabilities. Finally, a compete transfer function on the output of the second layer picks the maximum of these probabilities, and produces a 1 for that class and a 0 for the other classes. The architecture for this system is shown in figure 2 [31].

In this paper, the probabilistic neural network is used in our proposed retrieval system.

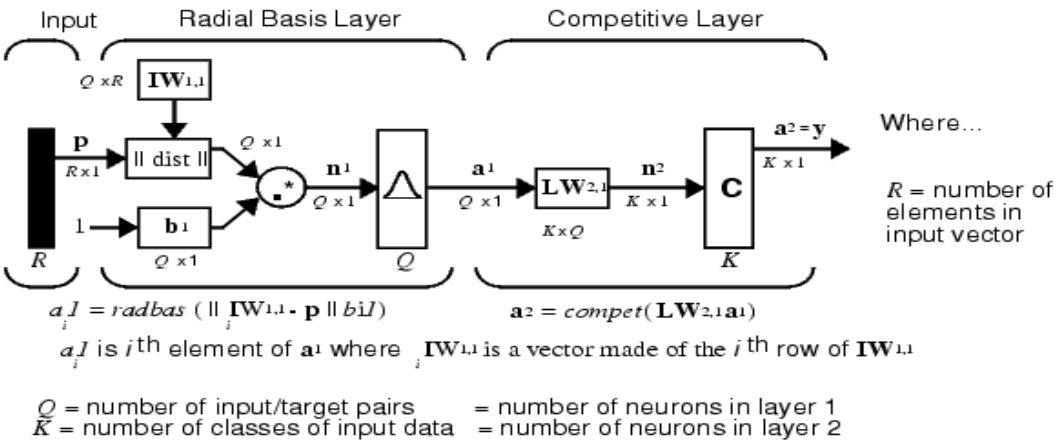

Fig. 2 Architecture of PNN.

5. The Proposed Retrieval System

The proposed shape representation and retrieval system is broken up into the following separate phases:

Phase 1- Image Preprocessing: This phase can be considered the preprocessing part of the system, in which the input shape image database is converted into a standard binary image and resized into size 100 by 100 pixels.

Phase 2- Image Representation: In the representation phase, the resized image is converted into a new represented image using the new proposed representation algorithm presented in section 2.0.

Phase 3- Feature Extraction: The feature extraction phase is extracting the seven Hu moment invariants features from the transformed image obtained in phase 2. These features will be used in our final part of the system. This part is called the shape retrieval phase of the system.

Phase 4- Retrieval Process: This phase has two stages: the training stage and the retrieving stage. In the training stage, the probabilistic neural network with seven input nodes and sixty output nodes is trained using the training features vectors (HMI vectors database). The optimal weights are obtained to be used in the retrieving stage. In this stage, a new image is classified and retrieved using the trained probabilistic neural network. All phases are depicted in figure 3.

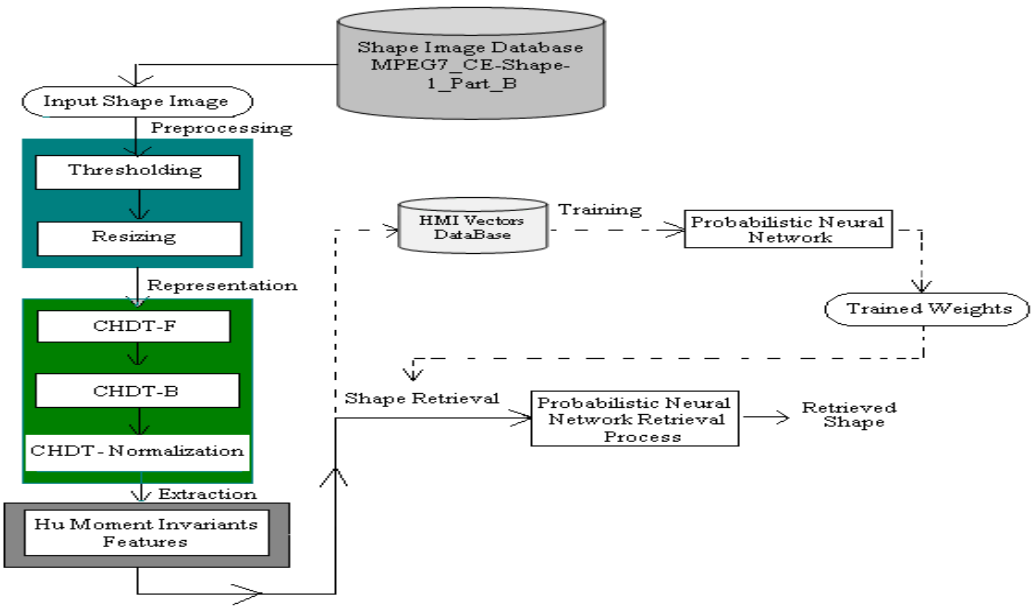

Fig. 3 The Proposed Retreival System Scheme

6. Experiments and Results

The database used here is MPEG7_CE-Shape-1_Part_B [28]. It consists of 1407 binary images of shapes. The images are resized into 100x100 pixels. Some examples are given in Fig. 4. Our work is implemented using Matlab 6.1. The experiments made on the shapes in figure 5 showed that HMI extracted from the proposed representation algorithm in section 2 are very close to each other but HMI features extracted from the original binary images are not. We can see the difference as shown in table 1.

The selected database used in the experiments consists of 660 images. The images are divided into sixty groups. Each group has 10 images. We used just one image per class in the training stage to train the probabilistic neural network. The number of images employed in the experiments is 600. In the ordinary previous retrieval system, Hu moments are extracted from the original binary images. The number of the inputs in both retrieval systems is 7 and the number of outputs is 60. The experimental results showed that the performance of the proposed retrieval system is better than the previous systems in the existing approaches [16, 19, 20, 21, 23] of using and extracting invariant moments from the original binary images. The results are given in table 2.

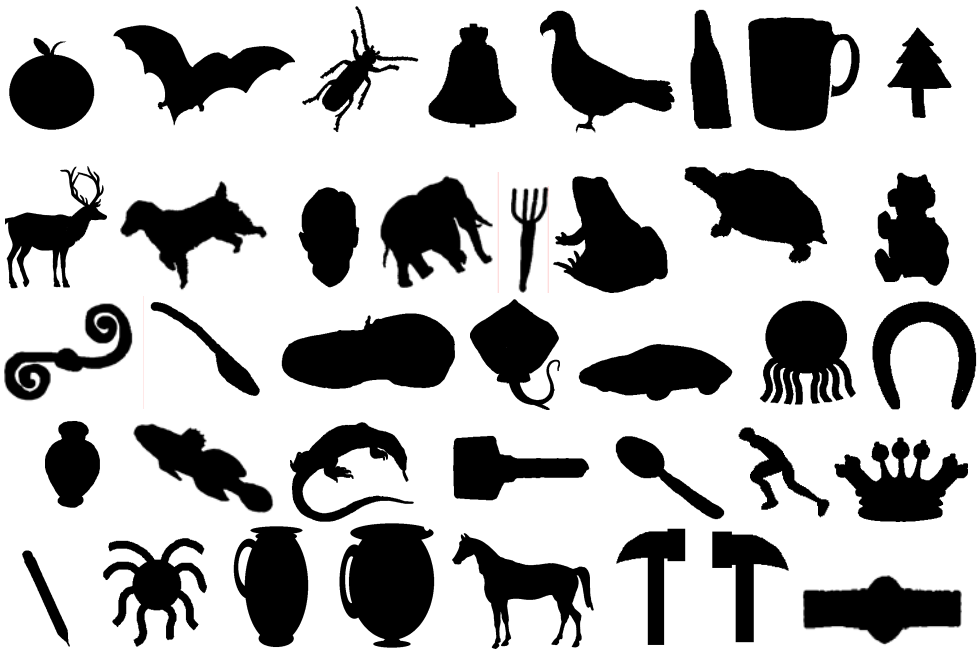

Fig. 4 A collection of shapes from MPEG7_CE-Shape-1_Part_B Database

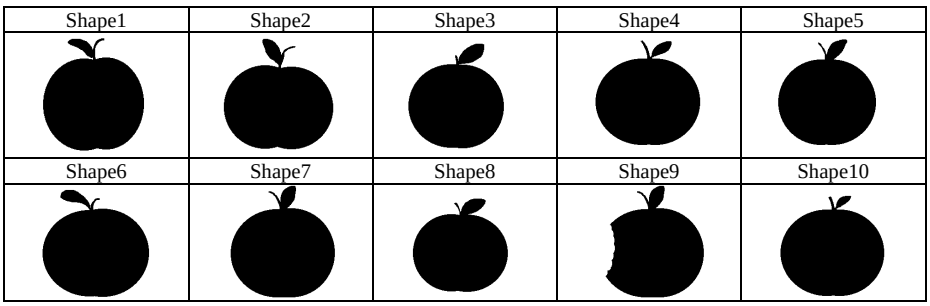

Fig. 5 Some examples of the shape Apple

Table 1 Hu Moments Invariants for different images of the shape Apple from MPEG7_CE-Shape-1_Part_B Database as shown in figure 5
a) HMI features are computed and extracted from the original binary images of shapes [16, 19, 20, 21, 23]

	Shape 1	Shape 2	Shape 3	Shape 4	Shape 5	Shape 6	Shape 7	Shape 8	Shape 9	Shape 10
I_1	1.8119	1.785	1.8078	1.8134	1.7925	1.7957	1.8083	1.8109	1.7984	1.8199
I_2	10.9732	7.7059	9.8407	8.4765	8.9108	8.2488	8.3923	9.8708	8.5502	8.0488
I_3	9.616	8.6743	9.1292	9.4774	8.31	9.1661	9.2192	9.1933	8.5451	10.1991
I_4	12.0434	11.7268	12.0218	13.1742	10.8697	11.3397	12.6844	12.2967	11.8259	14.757
I_5	22.9025	21.949	22.6048	24.5408	20.4596	21.5939	23.6394	23.0903	22.1902	27.3703
I_6	17.5386	15.9086	17.9168	17.8169	15.6161	17.2458	17.4857	17.6078	16.7357	19.0482
I_7	23.1861	23.4392	23.2513	25.3257	20.9811	21.9337	24.3805	24.4195	22.3385	28.1525

b) HMI features are computed and extracted from the transformed images using the proposed representation method in section 2.

	Shape 1	Shape 2	Shape 3	Shape 4	Shape 5	Shape 6	Shape 7	Shape 8	Shape 9	Shape 10
I_1	5.5856	5.5618	5.559	5.5475	5.5867	5.5377	5.5775	5.5374	5.55	5.5483
I_2	23.7253	23.0374	23.6277	23.8815	24.5062	22.3617	26.0026	23.2662	22.4896	24.4173
I_3	32.6383	29.8857	30.9199	30.163	30.8524	30.0994	31.1887	30.1443	31.8627	30.4111
I_4	25.2752	24.0942	24.5004	24.1507	24.9403	24.0437	25.0425	24.1682	24.3885	24.4902
I_5	56.6288	52.0749	59.9479	52.2097	52.9451	51.8672	53.5753	53.0148	52.7118	52.9459
I_6	37.3114	35.7808	36.4965	36.2328	37.5718	35.4583	38.2167	35.9428	35.8279	37.0322
I_7	54.3396	51.4098	53.0136	51.4484	54.3518	51.0575	53.1195	51.9147	52.5089	51.8364

Table 2.
Overall percentage performance of Existing Retrieval System and the Proposed Retrieval System

THE SYSTEM	Retrieval Rate
The existing Retrieval System in [16, 19, 20, 21, 23]	92.5%
The Proposed Retrieval System	94.8%

7. Conclusion

In this paper, an experimental comparison between the previous retrieval systems which are based on extracting HMI from the original binary images of the shapes and the proposed retrieval system which is constraining on extracting HMI from image boundary of shapes is described. The proposed retrieval system in our approach improves the retrieval performance by computing and extracting HMI from the transformed contour image obtained by the proposed representation method introduced in this paper.

Acknowledgments

This paper received financial support towards the cost of its publication from the Deanship of Research and Graduate Studies at Applied Science University, Amman, Jordan.

References

[1] R. S. Chora´s, "Image Feature Extraction Techniques and Their Applications for CBIR and Biometrics Systems", Int. J. of Biology and Biomedical Engineering, vol. 1, no. 1, 2007, pp. 6-16.
[2] IEEE Computer, Special issue on Content Based Image Retrieval, vol. 28, no. 9, 1995.
[3] D. Zhao et al, "A 3-D robust range feature extraction tool for industrial automation applications", Proceedings of the 1995 International Conference on Image Processing, vol. 3, pp. 3045.
[4] H. Kunz, "Feature extraction and supervised classification of MR images to support proton radiation therapy of eye tumors", Computer Methods and Programs in Biomedicine, vol. 73, no. 3, 2004, pp. 195-202.
[5] S.L. Garfinkel, "Forensic feature extraction and cross-drive analysis", Digital Investigation, 3S, 2006, S71–S81.
[6] S. Dey and D. Samanta, "Improved Feature Processing for Iris Biometric Authentication System", International Journal of Computer Systems Science and Engineering, vol 4, no. 2, 2008, pp. 127-134.
[7] J. Annesley et al, "Fusion of Multiple Features for Identity Estimation", International Conference on Imaging for Crime Detection and Prevention (ICDP), Visual Information Engineering IET, 2006, pp. 534-539.
[8] C. Jinhai, E. Dominic and S. Robert, "Image Retrieval Using Circular Hidden Markov Models with a Garbage State", In Proceedings Image and Vision Computing New Zealand 2007, pp. 115-120, Hamilton, New Zealand.
[9] I. El Rub et al, "MTAR: A Robust 2D Shape Representation", I. El Rub et al, "MTAR: A Robust 2D Shape Representation", International Journal of Image and Graphics, vol. 6, no. 3, 2006, pp. 421-443.

[10] N. Alajlan, "Shape Retrieval Using Triangle-Area Representation and Dynamic Space Warping", Pattern Recognition, vol. 40, no. 7, 2007, pp. 1911-1920.
[11] F.Y. Shih and Y.T. Wu, "Fast Euclidean distance transformation in two scans using a 3X3 neighborhood", Computer Vision and Image Understanding, no. 94, 2004, pp. 195-205.
[12] F.Y. Shih and O.R. Mitchell, "Decomposition of gray scale morphological structuring elements", Pattern Recognition, vol. 24, no. 3, 1991, pp. 195–203.
[13] J.G. Daugman, ”High confidence visual recognition of persons by a test of statistical independence,” IEEE Transactions on Pattern Analysis and Machine Intelligence, vol. 25, pp. 1148–1161, 1993.
[14] M. Kliot and E. Rivlin, "Invariant-Based Shape Retrieval in Pictorial Databases", Computer Vision and Image Understanding, vol. 71, no. 2, 1998, pp. 182-197.
[15] D. Forsyth, et al, "Projectively invariant representations using implicit algebraic curves", Image Vision Comput., vol. 8, 1990, pp. 130–136.
[16] G. Taubin and D. Copper, "Object recognition based on moment (or algebraic) Invariants", in *Geometric Invariance in Machine Vision* (J. Mundy and A. Zisserman, Eds.), 1992, Cambridge, MA, MIT Press, pp. 375–397.
[17] O. Weiss, "Projective invariants of shapes", in Proceeding DARPA Image Understanding Workshop, 1988, Cambridge, MA, pp. 1125–1134.
[18] A. Bruckstein and A. Netravali, On differential invariants of planar curves and the recognition of partially occluded planar shapes, 1990, Tech. Rep., AT&T Technical Memo.
[19] K.M. Hosney, "Optimized Set of RST Moment Invariants", American Journal of Applied Sciences, vol. 5, no. 6, 2008, pp. 726-735.
[20] M. Hu, "Visual Pattern Recognition by Moment Invariants", IRE Transactions on Information Theory, vol. 8, 1962, pp. 179-187.
[21] S.A.K. Dudani and B.J. McGhee, "Aircraft Identification by Moment Invariants", IEEE Transaction on Computers, vol. 26, 1983, pp. 39-45.
[22] R.Y. Wong and E.L. Hall, "Scene Matching with Invariant Moments", Computer Graphics, Image Processing, vol. 8, 1978, pp. 16-24.
[23] K. Tsirikolias and B.G. Mertzios, "Statistical Pattern Recognition Using Efficient Two-Dimensional Moments with Applications to Character Recognition", Pattern Recognition, vol. 26, 1993, pp. 877-882.
[24] M. Gruber and K.Y. Hsu, "Moment-Based Image Normalization with High Noise-Tolerance, Pattern Recognition, vol. 19, 1997, pp. 136-139.
[25] P. Campisi et al, "Robust Rotation-Invariant Texture Classification", IEEE Transaction on Image Process, vol. 13, 2004, pp. 782-791.
[26] C.P. Town and D. Sinclair, " Content Based Image Retrieval using Semantic Visual Categories", University of Cambridge, Technical Report, 2000.
[27] D. Wang and X. Ma, " A Hybird Image Retrieval System with User’s Relevance Feedback Using Neurocomputing", Informatica, vol. 29, 2005, pp. 271-279.
[28] http://www.chiariglione.org/mpeg/standards/mpeg-7
[29] http://articles.gourt.com/en/artificial%20neural%20network
[30] W. Hao, et al, "Head tracking by means of probabilistic neural networks", Meas. Sci. Technol. 18 (2007) 1999–2004.
[31] http://www.cs.berkeley.edu/titan/sww/software/matlab/toolbox/nnet/radial10.html

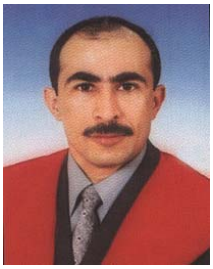

Zyad Shaaban was born in Jordan in 1969. He received a BSc. in Computer Science from Yarmouk University, Irbid, Jordan in 1992 and a Ph.D. in computer science from University of Technology, Johor Bahru, Malaysia in 1996. He is currently an assistant professor of computer science at the faculty of Information Technology, Applied Science University, Jordan. Dr. Zyad received a Fellowship from University of Technology, Malaysia and he was working on handwritten text recognition project. His research interests are: Handwritten Character Recognition, Moments Invariants, Neural Networks, Face Recognition, Image Retrieval and Arabic Text Recognition.

Thawar Arif is currently the head of Computer Science department at Applied Science University, Amman, Jordan. He has a Ph.D. from Baghdad University in Computer and Control Engineering, M.Sc. in Control and Instrumentation Engineering and B.Sc. in Control and Systems Engineering from University of Technology in Iraq. He is a member of the IEEE Computer Society. Also he is a professional member in the ACM. His research interests are: Image Retrieval, Watermarking, Adaptive Control systems and E-Government.